CONNECTION INSTRUCTIONS | Waterproof Mini RGB LED Controller with Remote

5-24VDC LED INPUT
DC+ / DC-

LED OUTPUT RGB(+)
4A x 3CH Max Output
12VDC-144W Max
24VDC-288W Max

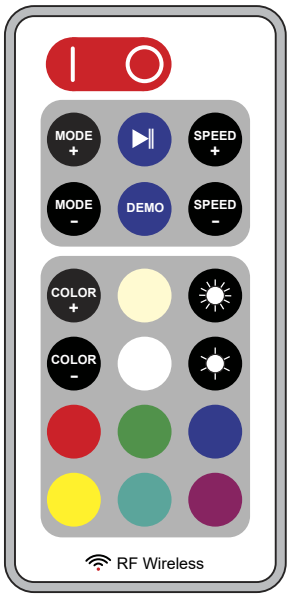

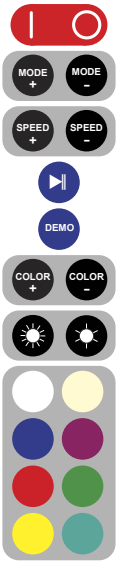

- Power On/Off
- Shuffle 43 Color Modes
- Speed Adjustment on Modes
- Play/Pause on Modes
- Play through 43 Modes
- Shuffle 30 Static Colors
- Brightness Adjustment on Static Colors
- Static Colors shortcuts

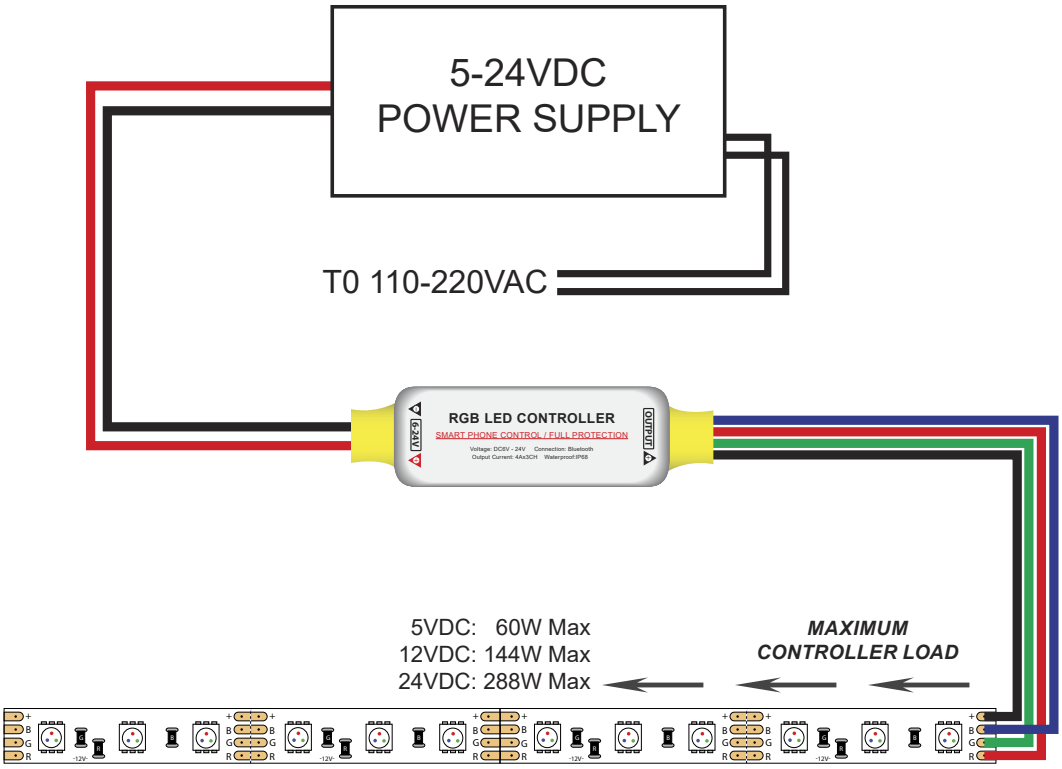

EcolocityLED.com
info@EcolocityLED.com

ECOLOCITY
LED Lighting Solutions

775-636-6060